Fechadura magnética de segurança para bebês

informação do produto

Nome do Produto	Fechadura magnética de segurança para bebês
Conjunto de combinação	4 fechaduras 1 chave 8 fechaduras 2 chaves (Para detalhes, entre em contato conosco)
Material	ABSÍmã
Cor	Branco
Logotipo	Aceite logotipo personalizado
Função	Evite lesões no bebê
Quantidade mínima	Aceite pedidos pequenos
Amostras	Disponível

Nossas fechaduras magnéticas para armários para bebês usam fita adesiva forte que pode resistir até mesmo aos pequeninos mais determinados, mantendo seus bebês e seus armários seguros. Como Fornecedor de fechadura magnética para gabinete na China, nossa visão é que a boa qualidade do produto pode trazer uma boa experiência aos clientes.

BALANCE

BABY MAGNETIC SAFETY LOCK

magnetic key design

invisible from outside

built-in installation

adhesives design

normally open

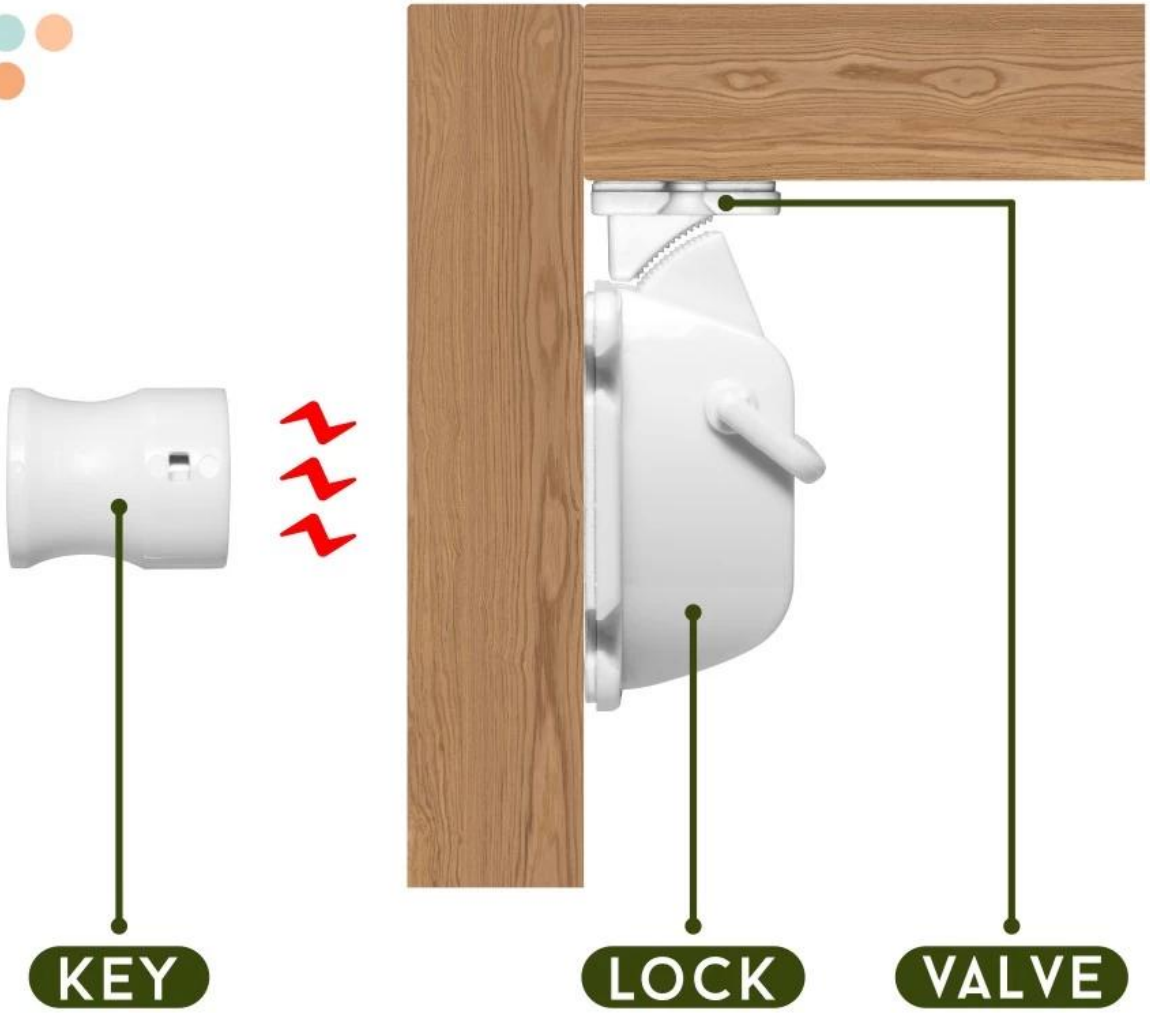
KEY
LOCK
VALVE

BALANCE DAILY COMMODITIES CO.,LTD

PRODUCT APPLICATION

Unit: millimeter

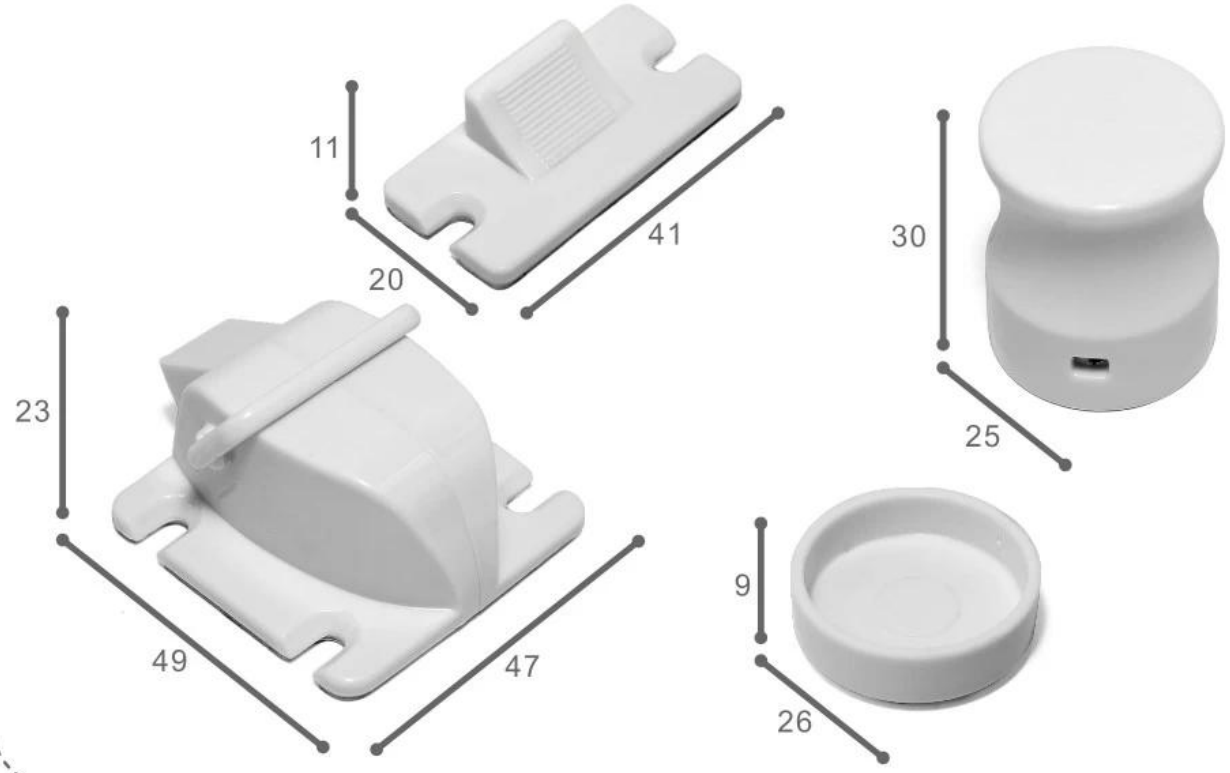

Installation aid:

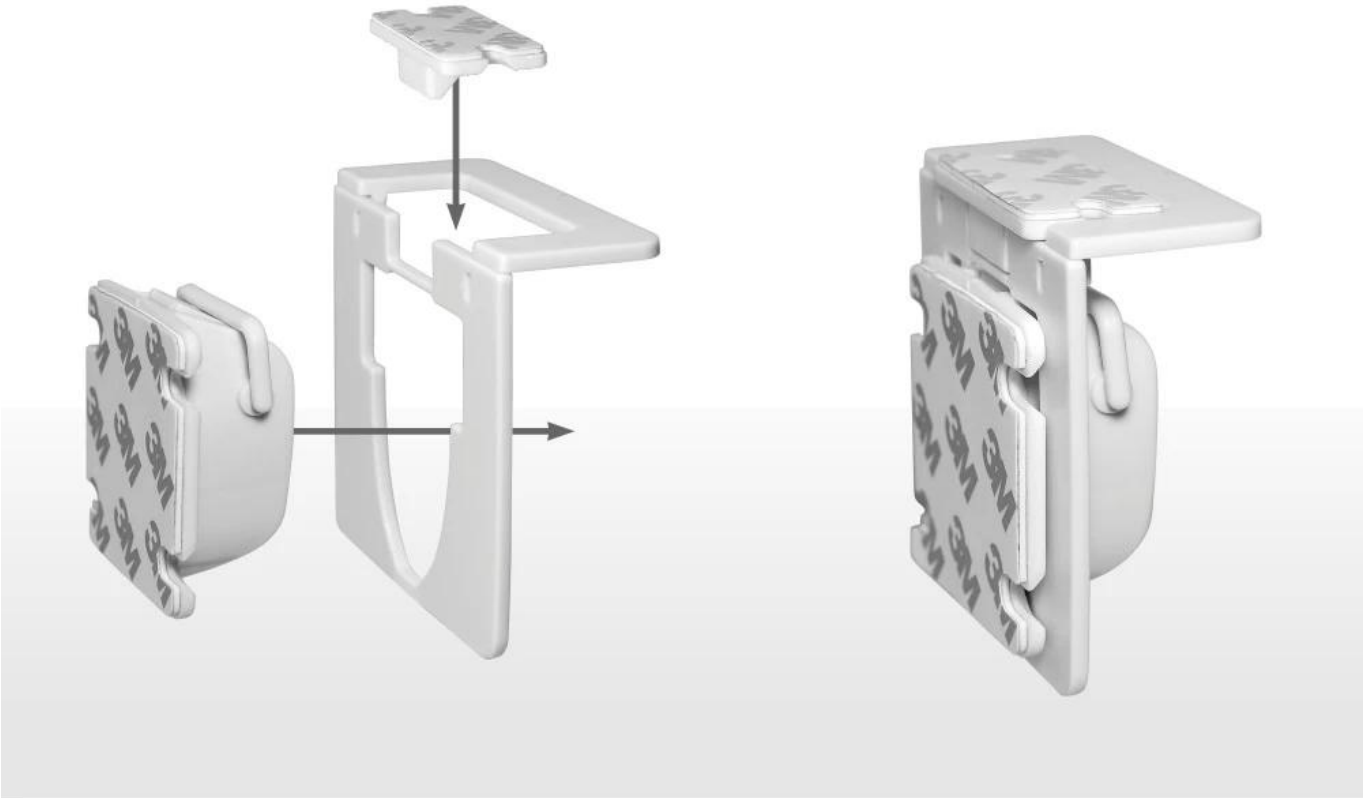

证书号第6285462号

实用新型专利证书

实用新型名称：一种底实用性磁力锁

发 明 人：陈冠文

专 利 号：ZL 2016 2 1238786.5

专利申请日：2016年11月19日

专 利 权 人：广州市界恩印电制品有限公司

授权公告日：2017年07月07日

本实用新型经过本局依照中华人民共和国专利法进行初步审查，决定授予专利权，颁发本证书并在专利登记簿上予以登记。专利权自授权公告之日起生效。

本专利的专利权期限为十年，自申请日起算。专利权人应当按照专利法及其实施细则规定缴纳年费，本专利的年费应当在每年11月19日前缴纳。未按照规定缴纳年费的，专利权自应当缴纳年费期满之日起终止。

专利证书记载专利权登记时的法律状况。专利权的转移、质押、无效、终止、恢复和专利权人的姓名或名称、国籍、地址变更等事项记载在专利登记簿上。

局长
申长雨

证书号第3706867号

外观设计专利证书

外观设计名称：磁力锁

发 明 人：陈冠文

专 利 号：ZL 2016 3 0022048.1

专利申请日：2016年01月21日

专 利 权 人：陈冠文

授权公告日：2016年06月08日

本外观设计经过本局依照中华人民共和国专利法进行初步审查，决定授予专利权，颁发本证书并在专利登记簿上予以登记。专利权自授权公告之日起生效。

本专利的专利权期限为十年，自申请日起算。专利权人应当按照专利法及其实施细则规定缴纳年费，本专利的年费应当在每年01月21日前缴纳。未按照规定缴纳年费的，专利权自应当缴纳年费期满之日起终止。

专利证书记载专利权登记时的法律状况。专利权的转移、质押、无效、终止、恢复和专利权人的姓名或名称、国籍、地址变更等事项记载在专利登记簿上。

局长
申长雨

This is a proprietary product developed independently.

2 Installation Methods

paste with double side stickers easy and convenient operation

install with screws make it much stronger

drawer

wardrobe

wine cabinets

cabinet

more

BALANCE DAILY COMMODITIES CO.,LTD

PRODUCT DETAILS

No. 1

Invisible Design

Unique product design allowing the drawer to be locked invisibly and safely upgraded

No. 2

Magnetic Key

Strong and long lasting magnetism,small size and suitablefor all kinds of furniture

No. 3

Widely Used

Can be installed at multiple angles,suitable for different parts of various furniture

No. 4

Normally Open

With a normally open function the baby is not at home and the drawer is free

Solve The Problem Of Traditional External Security Locks

Informações da Empresa

We have 5000m²factory, our own factory

The REAL STRENGTH is to show the true face to you

ISO 9001
质量管理体系认证证书

知识产权管理体系认证证书

amfori BSCI
Trade with purpose

Alibaba.com Assessed Supplier
Assessment Report
SGS

SGS

SGS

SGS

SGS

高新技术企业
证书
企业名称：广州市贝恩日用制品有限公司
证书编号：GR201844001640
发证时间：2018年11月28日
有 效 期：三年
批准机关：

公示证书
公示：广州市贝恩日用制品有限公司
连续三年(2017-2019)
广东省“守合同重信用”企业
监督机关：广州市市场监督管理局
2020年06月01日

Strict certification testing provides quality guarantee and WORRY-FREE EXPORT

We have achieved some inspection certification, such as ISO9001:2015, BSCI, SGS, TUV, etc. and have won the title of "Guangdong Province Credible Enterprise" for three consecutive years. In addition, we have obtained over 20 product patents and trademark, as well as 5 patent evaluation reports. A series of quality inspection reports provide quality guarantee and worry-free export.

CONTACT INFORMATION
TEL : +80 20 34992808
+86 18026363923
Web : www.homecommoditysupplier.com
E-mail : sales02@balance-china.com
Address : No.2 Shengyuan Street,Beiliu Ind Park,Dagang Town,
Nansha District,Guangzhou,Guangdong,China
Zip code: 511470