□□□□□□

□□□□□□□□□□□□□□□
□□□□□□BALANCE
□□□□□□ □□□□□□□□□□□□□
□□□□□□□□□□□□□□□□□□□□□
□□□ ABS +□□
□□□□ □□□□□□□□□□□□□□□□□□□□□□□
□□□□□□□□
□□□ □□□□□□□□□□□□□□□□□□□□□□□□□□□
□□□□□□□□□□□□□□□□□□□□
□□□□□□□□□□□□□□□□□□□

□□□□□&□□

□□□□□□□□
□□□
□□□□□□□□□□□□□□□□20□□□□□□□□□□□□□□□□

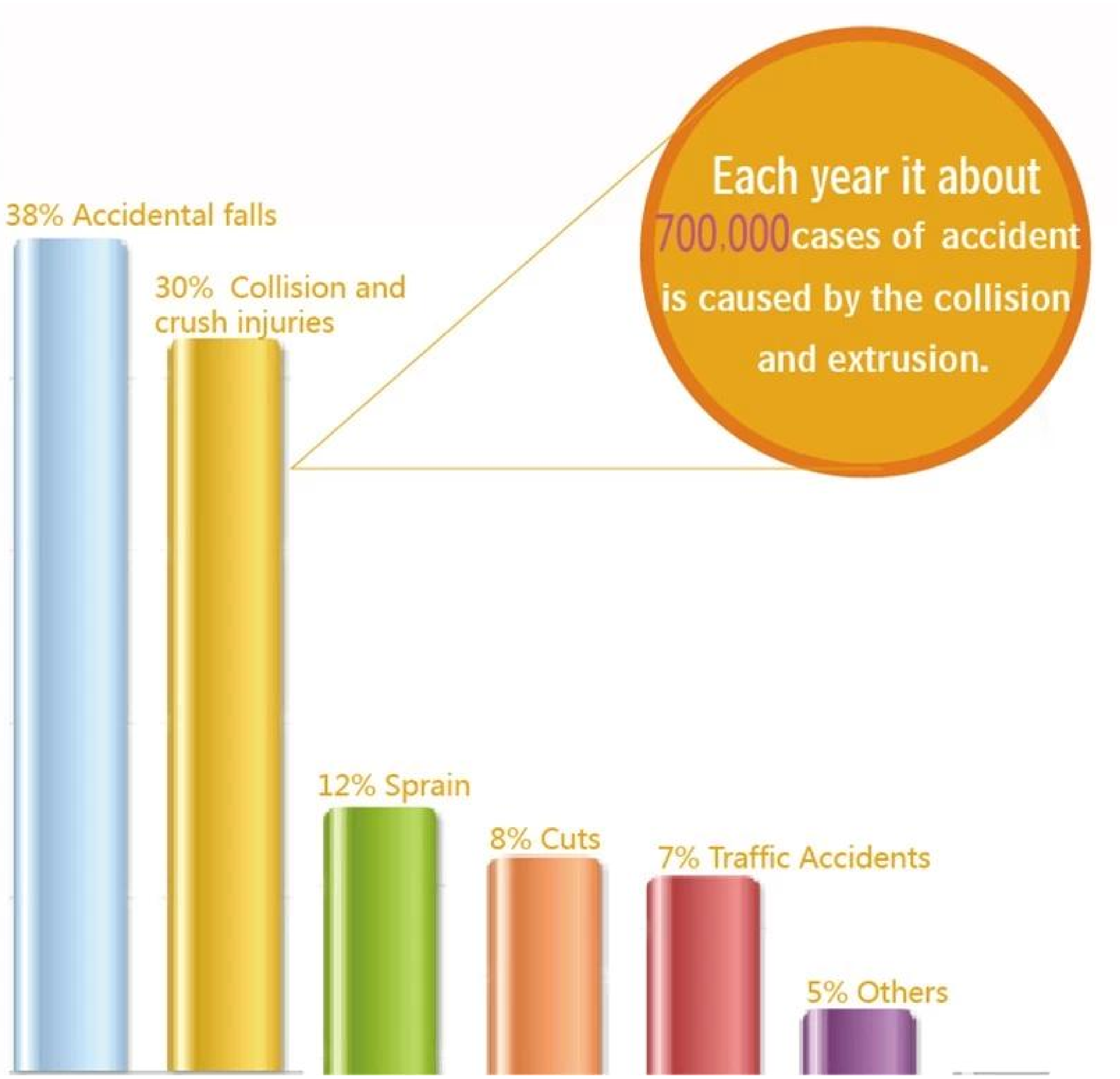
38% Accidental falls
30% Collision and crush injuries
Each year it about 700,000 cases of accident is caused by the collision and extrusion.
12% Sprain
8% Cuts
7% Traffic Accidents
5% Others

[illegible]

[illegible]4[illegible]+1[illegible]8[illegible]+2[illegible]

[illegible]

[illegible]

[illegible] - [illegible]

[illegible]

Now , you need a great helper

Baby safety Lock

Baby Safety Anti-collision Products

□□

Security
Durability
Practicability
Stability

□□□□□□
□□□□□□□□□□□□
□□□□□□□□□□
□□□□□□□□□□□

□□□□

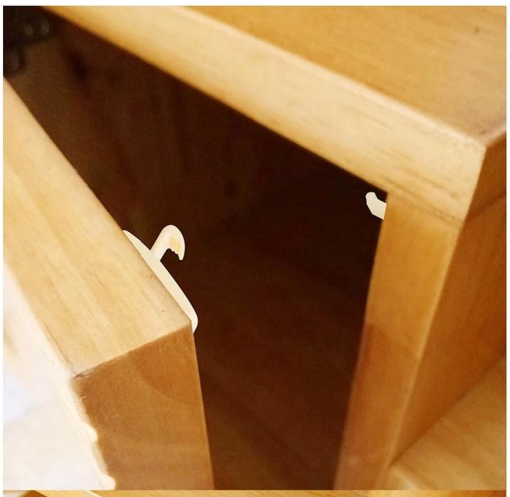

--4 locsk + 1□□+ 2□□□□□□□□□□ -

--8□□□+ 2□□+ 2□□□□□□□□□□ -

--strong sticky--

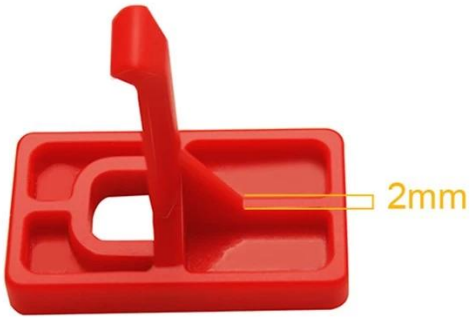

-Thick ABS plastic Durable,safety,innocuos--

--Thick thread hook,Anti-skid stability--

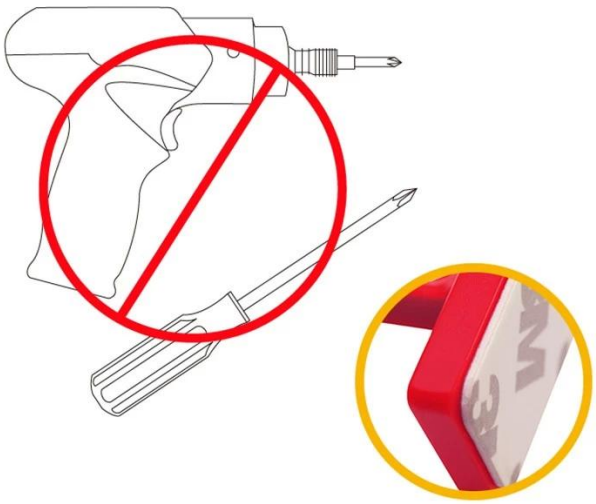

no screws needed,easy to use,no damage to furniture

Product Color

Customized colors, just for you

Claret-red

Red

Beige

Royalblue

Black

Product Description

Small figure,large role, durable, reusable
Easy to use, no damage to walls

Product name	New Baby Safety Magnetic Locks
Colors	Claret-red Red Beige Royalblue Black
Standard Package	16piece locks + 4 pieces key/set or 8 pieces locks+2pieces keys/set
Advantage	-Design without screws, easy to use -Lighter with small size but strong magnets -High quality ABS plastic, innocuous, environmental and duable

Size

How To Use

easy to intall,easy to use,
no damage to the walls

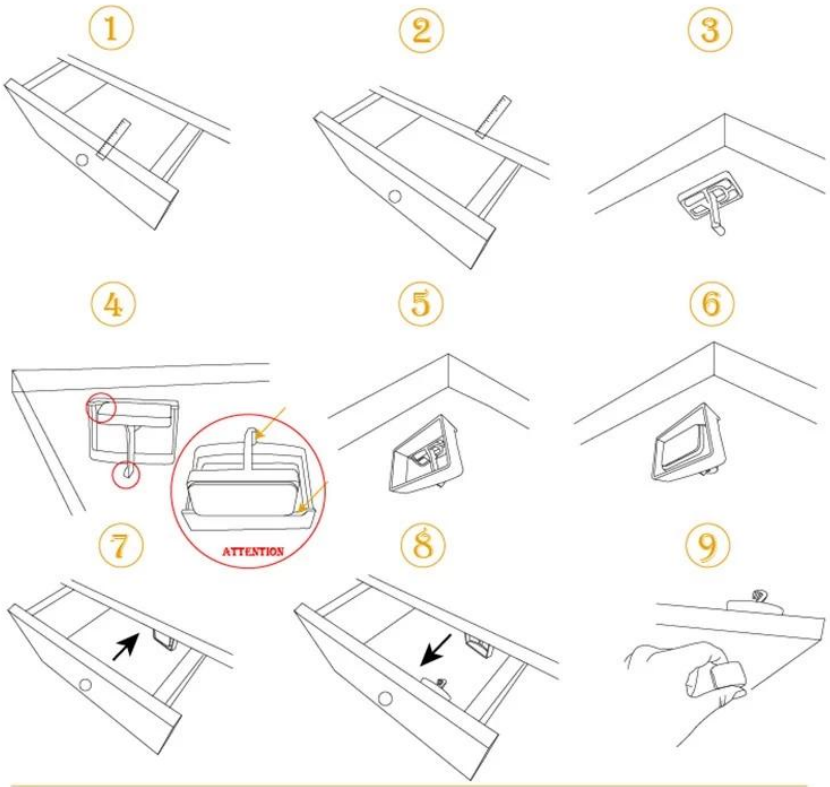

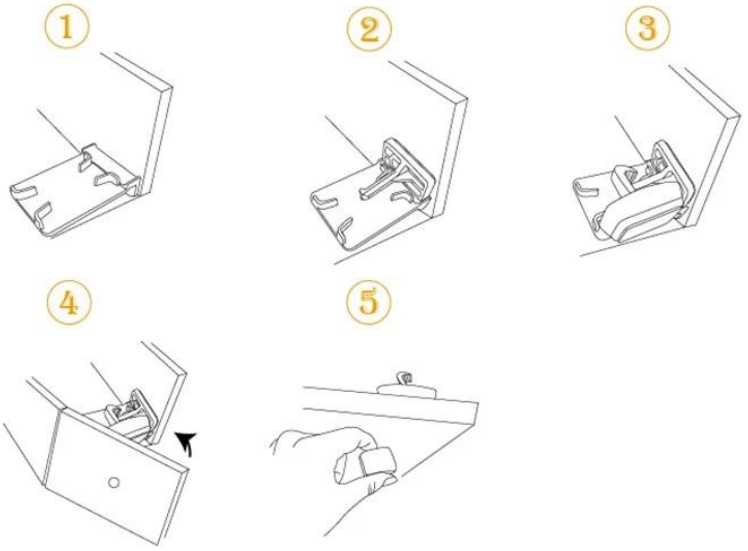

Attention

When this product is not in use, set to swithch-off / unlocked position

[illegible]

Q[illegible]

A[illegible]

[illegible]

Q[illegible]

A[illegible]

[illegible]

Q[illegible]

A[illegible]NO[illegible]

[illegible]

[illegible]

Q[illegible]

A[illegible]

[illegible]

2005[illegible]

- [illegible]

[illegible]

[illegible]

[illegible]

[illegible]

Shipping

Certificates
SYSTEM CERTIFICATION
ISO 9001:2000
SGS
www.tuv.com
TÜVRheinland
ID:0000000988
RoHS
UKAS
QUALITY
MANAGEMENT
Alibaba.com Assessed Supplier
Assessment
Guangzhou Balance Daily Commodities Co., Ltd.
Supplier Assessment Certificate
SGS

□□□□□□□□□□□□□□□□□ □□□□□□□□

□□□□□□□□□□□□□□□□□□□□□□□□□□□□□□□□