OEM□□□□□□□□□□□□□□□□□□□□□□□□□□□□□

□□□□□□□□□□□□□□□□□□□

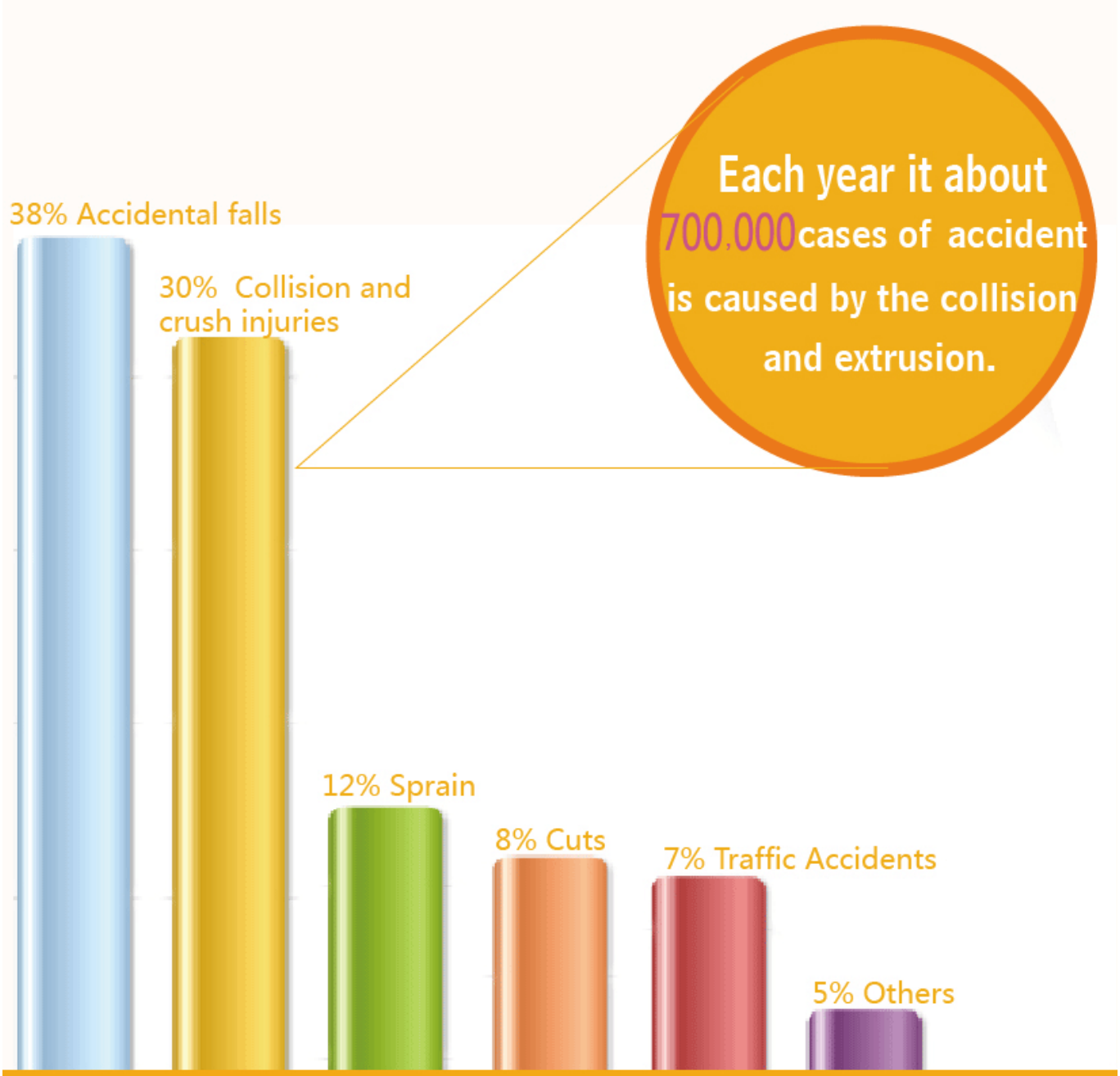

Baby safety magnetic drawer lock

Prevent child from getting hurt

□□□

1.Infants□□□

Usage

hild Proof
your home

Key cap keep the key high on the wall

Installation
Direction

Can be installated on doors in vertical direction and horizontal direction

□□□□□ *OEM*□□□□

SIZE

3M

PRODUCTS DESCRIPTION

- **Product name** Baby safety magnetic drawer lock
- **Color** White
- **Packaging** 4 pack or 8pack in blister

- **Features**
  - Bigger size, bigger & stronger magnet
  - Easy operation On-off switch
  - Adjustable magnetism
  - Sturdy structure
  - Never stuck

□□□□□

□□□□Paymen - t□□□□□□□□□□□□□□□□4□15□□□□□□□□□□□□□□□□

How to use

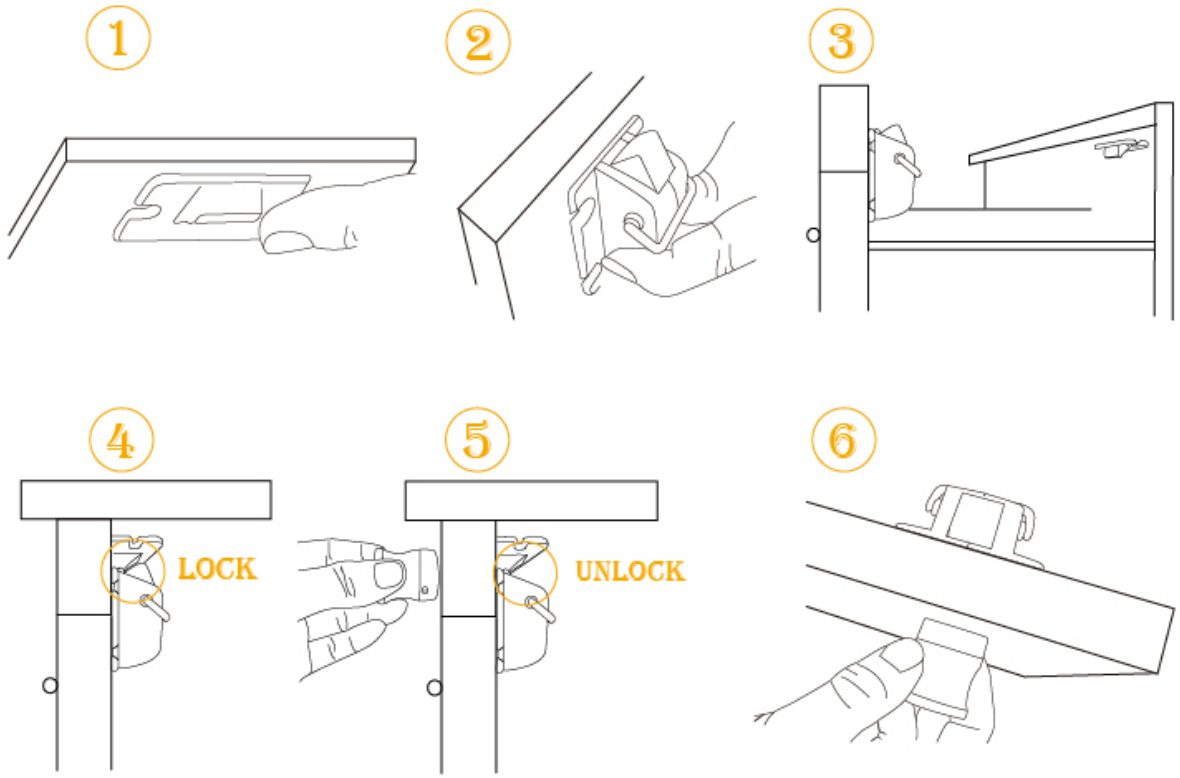

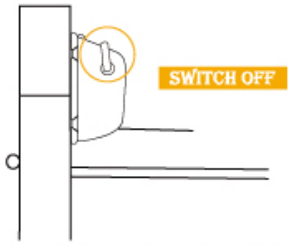

- The lock can be closed if you do not need it.

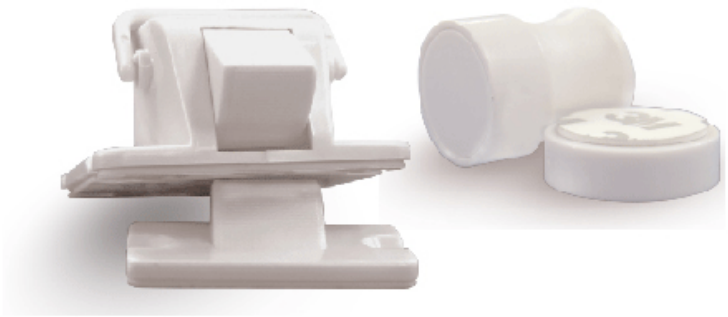

□□□

1.□□□

Q□□□

Shipping

□□□□□

Express(working days)				
DHL	FEDEX	UPS	Agent	EMS
3-5	3-5	3-5	around 7days	5-10

□□□

□□□□

□□□□□□

□□□□□□□□□□□□□□□□□□ □□□□□□□

□□□□□□□□□□□□□□□□□*attenteion*□□□□□□□□□□□

□□□□□□□□□□□□□□□□□□ *www.homecommoditysupplier.com/*