□□□□□□□□□□□□□□□

□□□□□
□□□□□□□□□□□□□
□□□□□/ ABS□□+ PP□
□□□□□□□□□□□□□□□
□□□43mm * 80mm
□□□□□□□□□□□□□□□
□□□PE□□□□□□□□□□□
□□□□□□□□□□□□□□□
□□□□□□□□□□□□□

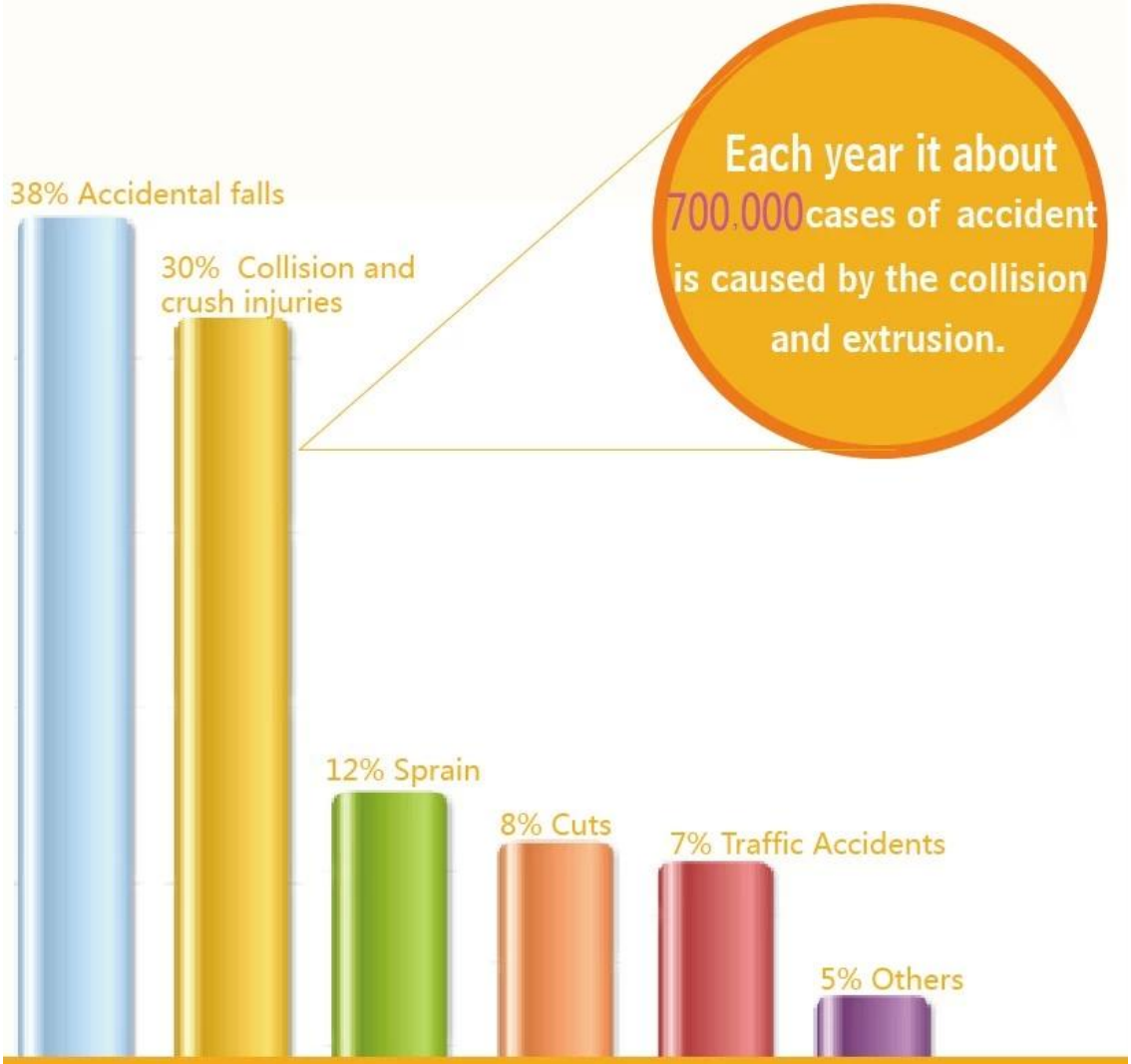

Use our Anti-tip TV/ Furnture safety strap

Prevent child from getting hurt

[illegible]/[illegible]

- [illegible]
- [illegible]60“
- [illegible]ABS[illegible]PP[illegible]
- [illegible]
- [illegible]

[illegible]

[illegible]

[illegible]

[illegible]30[illegible]

[illegible]

Usage

Stronger

High quality material

Multi-purpose

Fix TV to furniture
Fix TV to wall
Fix Furniture to wall
Other appliance

Adjustable

Come with sturdy metal CAM buckle, easy to adjust

□□□□□□□□□□□□□□□□□□

SIZE

ALL TV AND FURNITURE MOUNTING HARDWARE INCLUDED

PRODUCTS DESCRIPTION

- **Product name** Anti-tip TV/furniture safety strap
- **Color** (Accepting custom) Beige Brown Black White
- **Material** Metal/ABS plastic

- **Features**
  - -Length adjustable
  - -Wide & thick metal sheets with rackplating / Strong ABS plastic parts
  - -Heavy duty webbing belt
  - -Strong sewing with "X"Stitch

□□□□□□□□

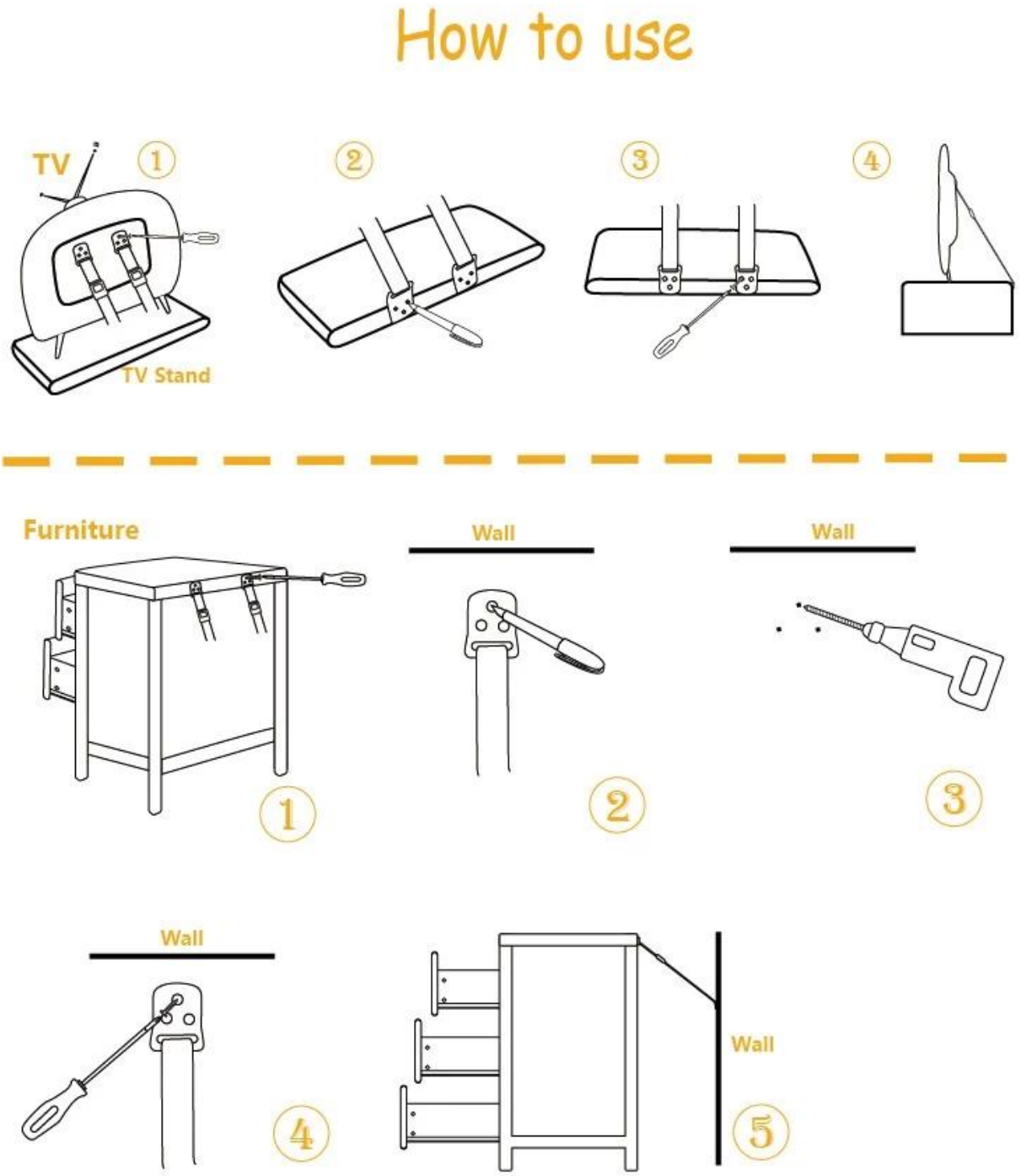
How to use
TV
1
2
3
4
TV Stand
Furniture
Wall
Wall
1
2
3
Wall
Wall
4
5

□□□□

□□□□□□□□□□□□□□

A□□□□□□□□□□□□□□□□□□□□□□□□□□□□□ □□□□□□□□□ □□□□□□□□□□□□□□□

□□□□□□□□□□□□

A□□□□□□□□□□□□□□□□□ □□□□□□□□□□□□□□□

□□□□□□□□□□□

A□□□□□□□□□□□□□□□□□□ □□□□□□□NO□
□□□□□□□□Paypal□□□□□□□□□□□□□□ □□□□

□□□□□□□□□□□□□
A□□□□□□□□□□□□□□□□□□□□□□□□□□□□□□

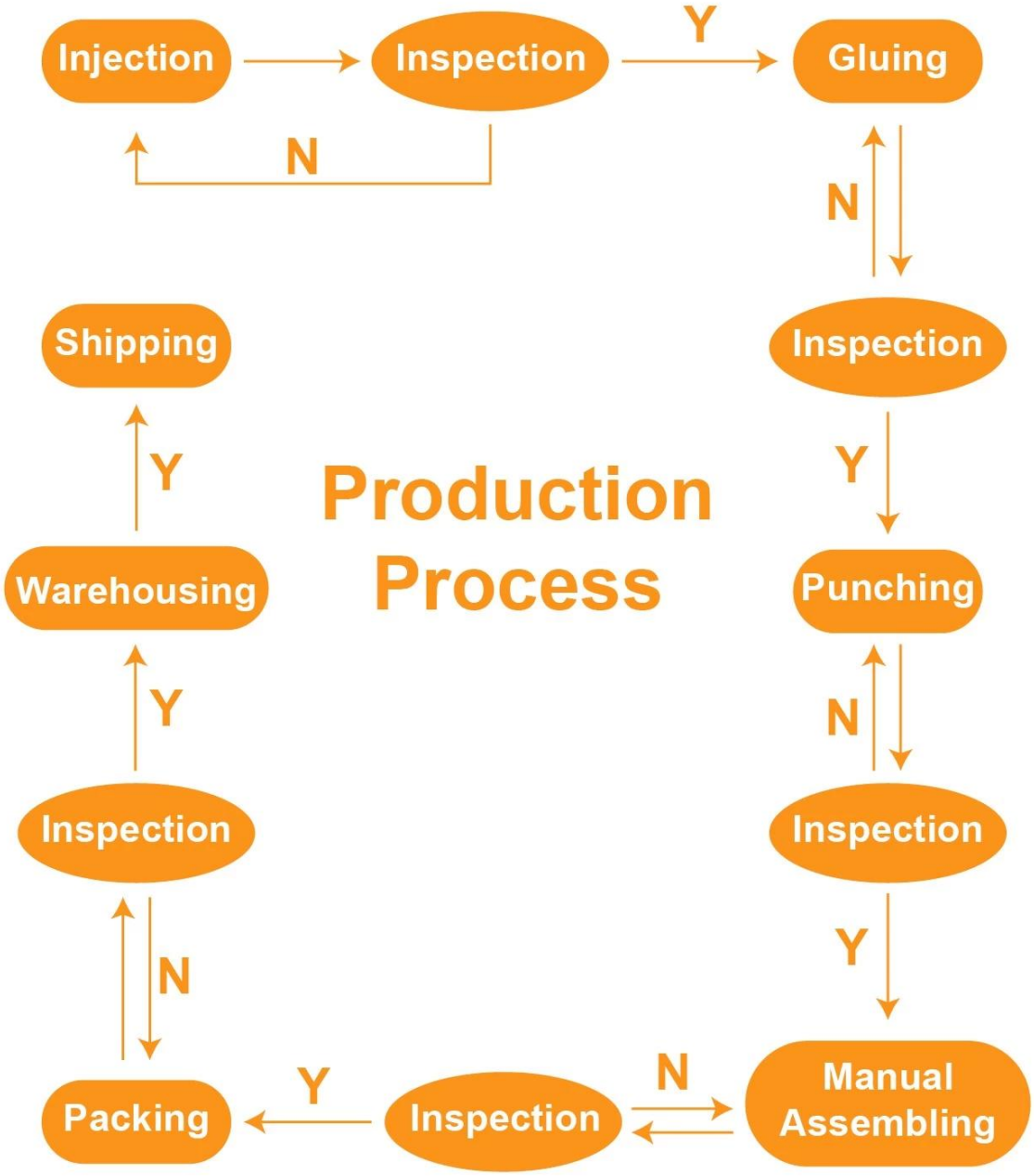

□□□□

Company Profile

Guangzhou Balance Daily Commodities Co.Ltd

□□□□□□□□□□□□□□□□2005□Ltd□□□□□□□□□□□□□□
□□□□□□□□□□□□□□□□□□
□□□□□□□□□□
□□□□□□□□□□□□□□□□□□□□□□□□□□□□
□□□□□□□□□□□□□□□□□□□□□□□□□□□□□□□□
- □□□

Shipping
ups
TNT
DHL
EXPRESS
FedEx
Express
EMS
全球邮政特快专递
WORLDWIDE EXPRESS MAIL SERVICE

□□□

□□□□□□□□□□□□□□□□□

[illegible]

[illegible] [illegible]

[illegible]

[illegible] www.homecommoditysupplier.com/